◢ PEAKTRONICS

POT-113

3K Feedback Potentiometer, 1 turn

The Peaktronics POT-113 is used exclusively with DHC-series controllers to correct for feedback potentiometer gear ratios of 3 to 1 and still provide 450 points of resolution in quarter-turn actuator applications.

The POT-113 is a 360° continuous rotating potentiometer that has a usable electrical angle of 340° ±5° and a usable electrical range of 33%. The stainless steel shaft and precious metal multi-finger wiper contact provides durability and reliability in actuator applications. The unit comes with 18" of 22 AWG wire connections and the necessary mounting hardware to attach to brackets up to 0.100" thick.

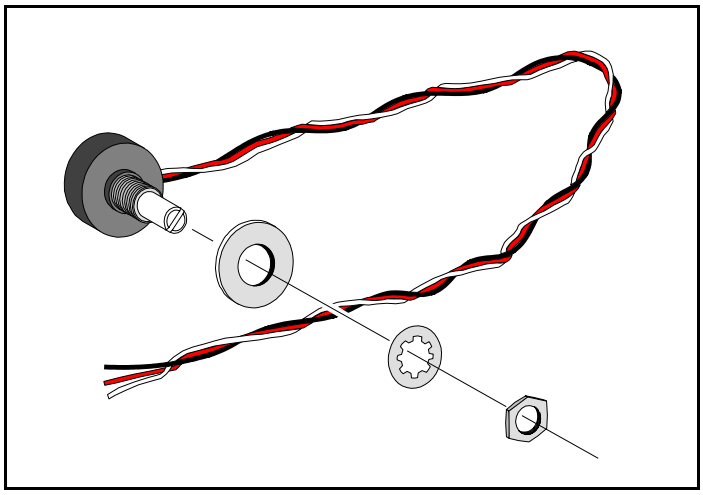

SPECIFICATIONS

Resistance @ 20°C	3K ohms ±7%
Linearity	±2% max
Power Rating	0.75W @ 70°C (0W @ 105°C)
Operating Temperature	-40 °C to 105 °C
Insulation Resistance	1000M ohms min @ 500 VDC
Dielectric Strength	500V RMS for 1 minute
Life Cycles	5,000,000 min

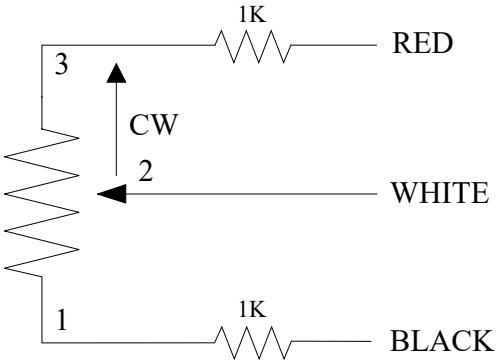

ELECTRICAL DIAGRAM

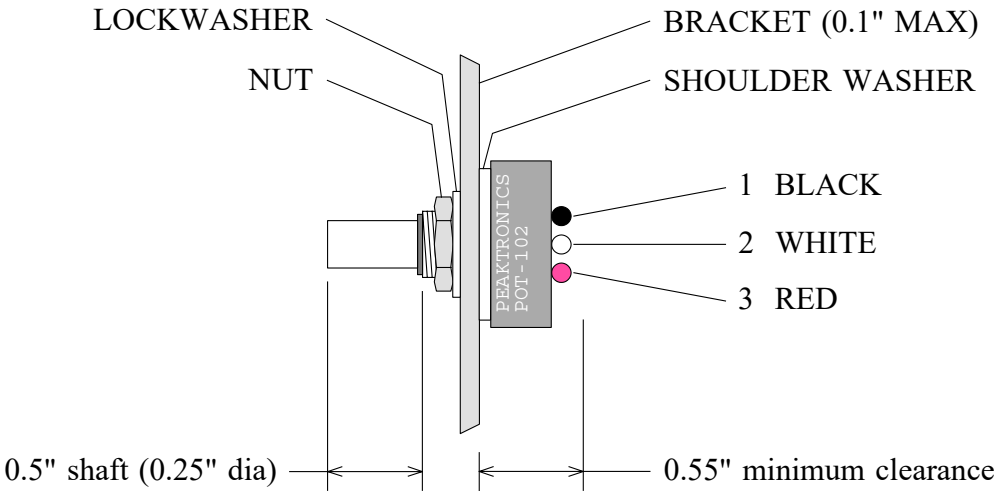

PEAKTRONICS, Inc. *1363 Anderson Clawson, MI 48017 Phone (248) 542-5640 sales@peaktronics.com*